Unit 2, Drury Way Industrial Estate,
Laxcon Close,
London,
NW10 0TG

020 8158 6015
accounts@jmddistribution.co.uk

Bridge Packer BP20

Colour	T mm	W mm	L mm
Black	5	20	100

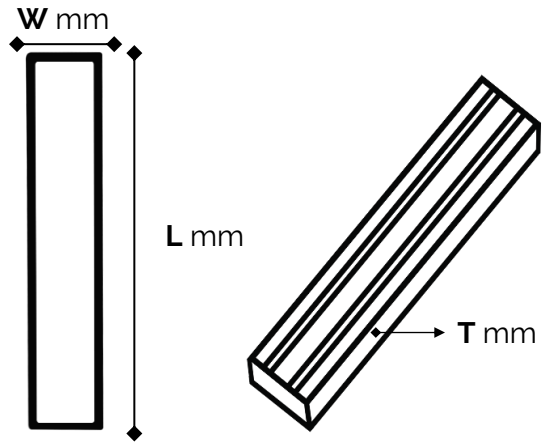

*Not to scale, all dimensions nominal

Processing:
The below data has been taken from our raw material data sheet.
Injection Moulding

Control Property:	ISO Method	Units	Values
Melt Flow Rate (230˚C/2.16 kg)	1133	g/10 min	12

Typical Properties[a]:	ISO Method	Units	Values
Density	1183-1	g/cm^3	0,903
Flexural Modulus - 1% secant	178	MPa	1050
Tensile Strength at Yield	527-1	MPa	24
Tensile Elongation at Yield	527-1	%	6
Shore Hardness (D Scale)	868	-	70
Notched Izod Impact Strength at 23˚C	180	kJ/m^2	40
Notched Izod Impact Strength at -20˚C	180	kJ/m^2	6
Deflection Temperature under Load at 0.455 MPa	75-1/75-2	˚C	88
Vicat Softening Temperature at 10N	306	˚C	145

a) Injection molded specification according to ISO 294.

All product specifications and data are subject to change without notice

The data contained in this data sheet is believed to be accurate and is reproduces in good faith. This is based on material we use and can differ\alter subjected to material availability/extenuation circumstances. It is the customers responsibility to validate that a particular product described here-in is suitable for use in their application.

JMD disclaim anu and all liability for any errors, inaccuracies or incompleteness contained in this datasheet. In addition, JMD makes no warranty, representation or guarantee regarding the suitability of the product described by the datasheet for any particular or associated purpose.